PHOENIX
Air Springs

1 E 26 A-14 75340

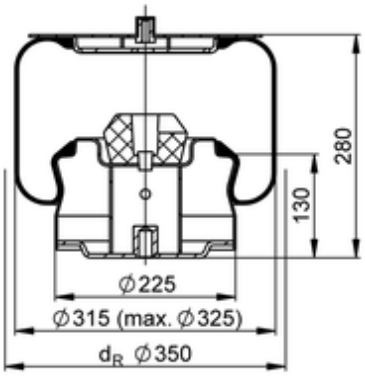

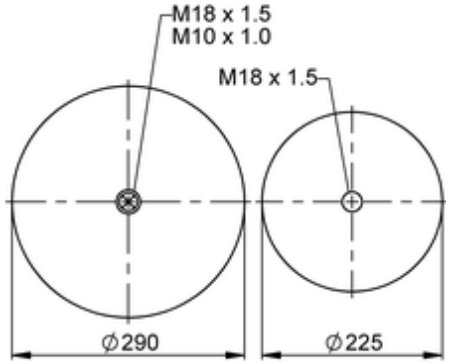

● bolt or stud ○ hole ⊗ combination stud ⊗ air inlet

Article status	Normal
GTIN/EAN	4054389124372
Bellow number	1 E 26 A
kg	10,8 kg
	M18x1.5: max. 80 Nm

OE Manufacturer/Part No.

Manufacturer	Original Part No.	Model
ZF Sachs	0501 215 444	
ZF Sachs	0501 215 603	AV132

© 2026 Phoenix Air Springs, ALL RIGHTS RESERVED. http://www.phoenix-airsprings.com/