PHOENIX
Air Springs

1 D 28 B-2

71351

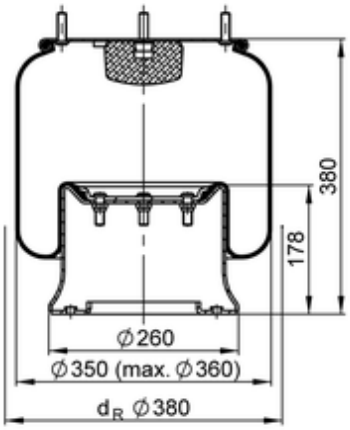

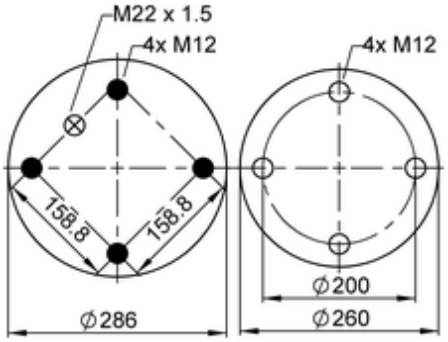

● bolt or stud ○ hole ⊗ combination stud ⊗ air inlet

kg	13,2 kg
	10002099
	K002
	M12: max. 70 Nm
	M22x1.5: max. 20 Nm

OE Manufacturer/Part No.

Manufacturer	Original Part No.	Model
Granning	15634	
Hendrickson	785 170	
Kässbohrer	4.731.030.000	
Kässbohrer	4.731.033.000	
Viberti	644 285	

Viberti	128 147 122	
Weweler	US 87408	
Weweler	US 07345	
SAE	8403 / 102	
SAF - Holland	2.229.0010.00	
Renault	5.010.130.925	
Paul NFZ	P2700MB0813	
Trailor	6502 3482	
Trailor	003 6158 E	
Titan	916 8770 0000	
Trouillet	ST 225-675	
SAF - Holland	2923	
Scania	1723269	
Weweler	YP87408SF	
Meritor	2121 5633	
SMB	08403102	
SAF - Holland	02229001000	
SAF - Holland	02229000300	
Renault	5.000.790.692	
SAF - Holland	2.229.0003.00	2923 AR 211-213. AR 413
SAF - Holland	2.229.2603.00	2923 AR 211-213. AR 413
SAF - Holland	2.229.2403.00	2923 AR 211-213. AR 413
SAF - Holland	2.229.2103.00	2923 AR 211-213. AR 413
SAF - Holland	2.229.0003.00	2923 R 112-113. R 142-143
Hendrickson	505 859	Airpoise <'86
Hendrickson	505 859 / 01	Tecair
Pegaso	175005	Troner

© 2024 Phoenix Air Springs, ALL RIGHTS RESERVED. http://www.phoenix-airsprings.com/