PHOENIX
Air Springs

1 D 28 A-10 71563

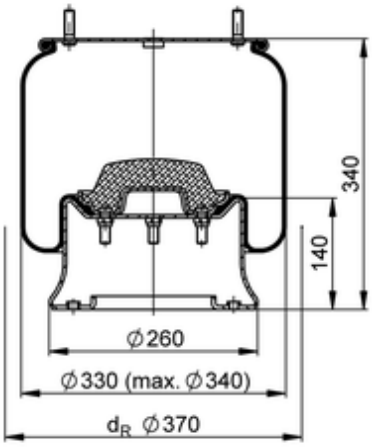

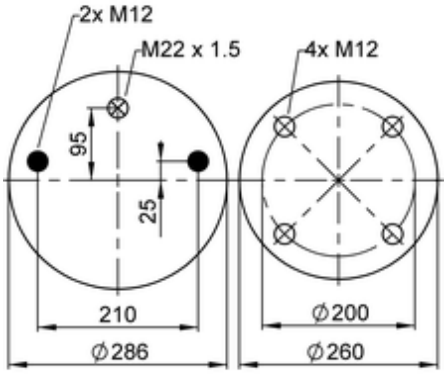

● bolt or stud ○ hole ⊗ combination stud ⊗ air inlet

kg	12,5 kg
	10002290
	K001
	M12: max. 70 Nm
	M22x1.5: max. 20 Nm

OE Manufacturer/Part No.

Manufacturer	Original Part No.	Model
Scania	1723275	
SAF - Holland	03229002700	
SAF - Holland	03229222700	
SAF - Holland	03229212700	
SAF - Holland	2918V	

SAF - Holland	3.229.2227.00	2918 V
SAF - Holland	3.229.0027.00	2918 V
SAF - Holland	3.229.2127.00	2918 V P01

© 2024 Phoenix Air Springs, ALL RIGHTS RESERVED. http://www.phoenix-airsprings.com/